序号	DESCRIPTION	QTY	REMARK
①	OBD 16P NICKEL COATING PINS	16PCS	
②	ABS,OBD 16 FEMALE PLUG	1PCS	
③	OBD FEMALE INJECTION BLK PVC 45P	0.2KG	
④	9P BLK FLAT CABLE,2.45MM, L=480MM	480MM	
⑤	OBD 16P (24V) NICKEL COATING PINS	16PCS	

序号	DESCRIPTION	QTY	REMARK
⑥	ABS,OBD 16P MALE PLUG	1PCS	
⑦	OBD MALE INJECTION BLK PVC 45P	0.2KG	

1, PIN OUT INFORMATION:

16P OBD M	2	4	5	6	7	10	14	15	16
CABLE COLOR	BLK	BLK	BLK	BLK	BLK	BLK	BLK	BLK	BLK
16P OBD F	2	4	5	6	7	10	14	15	16

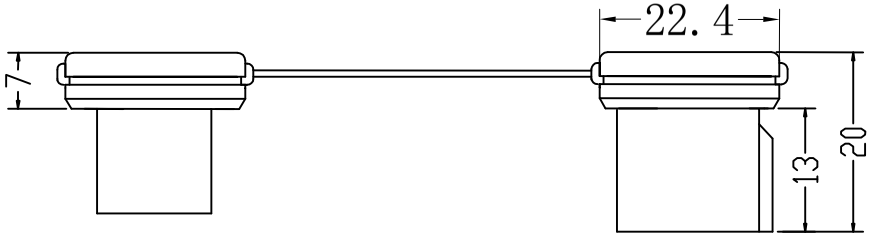

2,SIZE DIMENSION:

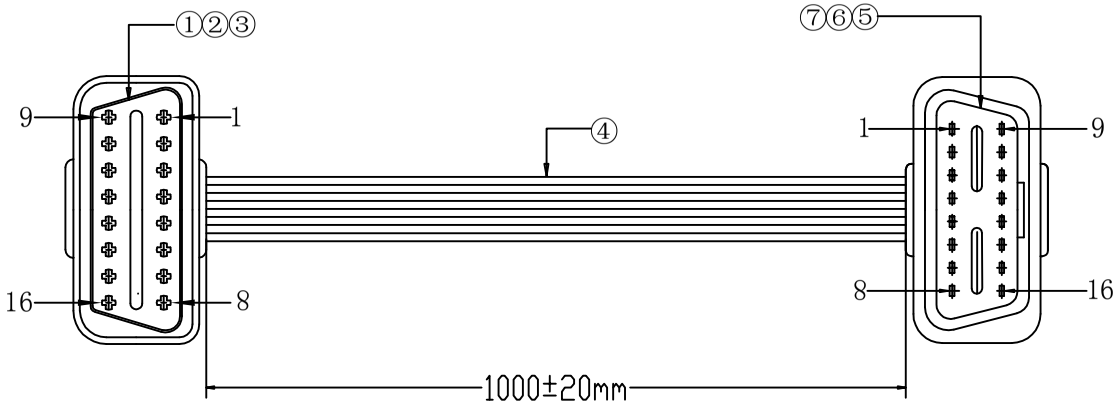

3,TESTING REQUIREMENT:

1,100% TESTING PAST,NO SHORT, BRONKEN,MIS-WIRE

2. CONTACT RESISTANCE TEST:≥2MΩ(DC300V)

MODEL NO.	AOT-210A	SCALE	Free	AOTAI INDUSTRY CO LTD					
DESIGN	AOTWEI 13.09.29	UNIT	mm						
CHECKED	Qwei 13.09.29	SCIAGRAPHY		NAME	OBDM TO OBD F	CUSTOMER			
APPROVE				C P/N:		VERSION	A.0		

标志	修 改 内 容	修改时间